ARKEN JENERATÖR

ARK-B 940 S5

Powered by Baudouin

WATER COOLED

3 PHASE

50 HZ

DIESEL





ISO 9001 2015 CERTIFIED

GENERAL CHARACTERISTICS

		Prime[1]	Standby[2]
Power	kVA / kW	**855 / 684**	**940 / 752**
Speed	r.p.m	1500	
Standard Voltage	V	400/230VAC	
Power Factor	Cos Phi	0.8	

[1] ***Prime Power (PRP)***
It is a form of operation under variable load as a constant power supply. The average load must be 70%.
10% overload every 12 hours is permitted when operating under variable load for 24 hours.

[2] ***Standby Power (ESP)***
A variable-load limited-time behavior in the event of a loss of a reliable mains supply.
It is used as a backup to the network energy and overloading is not allowed.

Arken Generator holds following certificates: ISO 9001:2015, CE, TS ISO8528-5, TS ISO 8528-13, TS ISO 8528-4, ISO 10002:2014, ISO 14001:2015, ISO 45001:2018, Noise Directive 2000/14/EC G3 class ISO 8528-5/15.10.2015 ISO 8528-13/13.04.2018

Arken Generator products are manufactured according to following EEC standards:

Machinery Directive	**2006/42/EC**
	EN ISO 12100:2016
Low Voltage Directive	**2014/35/EU**
Noise Directive	**2000/14/EC**
Controlgear & Switchgear	**TS ISO 8528-4 :2015**
Generating Sets	**TS ISO 8528-5 :2015**
Safety	**TS EN 12601 :2013**

ARKEN GENERATOR *Life Goes On...*

This document is for informational purposes only. Arken Jenerator reserves the right to change product specifications.

Engine Technical Data 1500 r.p.m.	
Brand:	BAUDOUIN
Power PRP [kW]:	730
Model:	6M31G900/5
N° of Cylinders / Valves:	6/24
Engine Type:	4
Displacement [lt] :	18.5
Aspiration:	Turbocharged - Aftercooled
Bore[mm] x Stroke[mm] :	149x177
Compression Ratio:	14:1
Air Filter:	Heavy Duty
Cooling Method:	Water Cooled (water + %50 antifreeze)
Total Coolant Capacity (lt):	90
Governor Type :	ECU
Electrical System:	24VDC
Battery Charger Current:	80
Oil Capacity [lt] :	60
Exhaust Gas Flow PRP [m³/min] :	157,8
Exhaust Gas Temp. [°C] :	≤680
Air Flow PRP [m3/min] :	44.9
Cooling Air Flow PRP [m3/min] :	790
Starter Power (kW) :	10
Standard Battery Voltage [V]:	24VDC
Standard Battery Capacity:	4x105Ah
Standard Battery Type:	Maintenance-Free Lead Acid

Fuel Consumption (lt/h):			
%110 ESP	**%100 PRP**	**%75 PRP**	**%50 PRP**
190	170	122	82

(The specific gravity is 0.84 and the fuel is considered to be BS2869, Class A2.)

Alternator Data	
Brand:	STAMFORD
Model :	S6L1D-D
Voltage :	400 /230 VAC
Number of Phase :	3
Power Factor:	0.8
Number of Poles:	4
Connection Type:	Star
Bearing:	Single
Insulation Class:	H
Protection Class:	IP23
Winding:	2/3
Control System :	Self Excited
Voltage Regulator :	Electronic AVR
Efficiency 4/4 400VAC 50Hz (cosϕ=1) **:**	96.1
Voltage Regulation :	±%1
THD:	<%3
Appearent Power [kVA] Prime 400VAC 50Hz 125ºC/40ºC	940

This document is for informational purposes only. Arken Jenerator reserves the right to change product specifications.

Control Panel



ISO8528-4
IP44
Trans - AMF Control Unit
DSE Control Unit (Optional)
Emergency Stop Button
Battery Charger 5Amp
Governor
Connection Bus (Under Panel)
Control Relays
Thermal & Magnetic Protection (Optional)

Control Device Specifications
- IP65 Front Panel
- Automatic/Manual/Test operation modes
- CanBus J1939 ECU
- 2nd Language Selection
- Last 500 incident and alarm information record
- Statistical Record
- Grid and Generator phase order control
- Grid Voltage Control
- RS-485 Communication
- GPRS - Ethernet connection (Optional)
- Automatic transfer switching control and motor control





Dimensions & Weights

	L [mm] Length	W [mm] Widht	H [mm] Height	Dry Weight [kg]	Fuel Tank Capacity (lt)	Service Hour Without Refueling	Sound Level dBA@7mt
Open Type	4316	1979	2346	N/A	1500	8,8	n/a

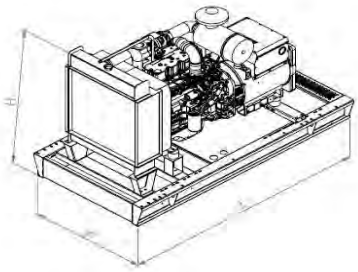

	L [mm] Length	W [mm] Widht	H [mm] Height	Dry Weight [kg]	Fuel Tank Capacity (lt)	Service Hour Without Refueling	Sound Level dBA@7mt
Canopy Type	5810	2260	2482*	N/A	1500	8,8	88

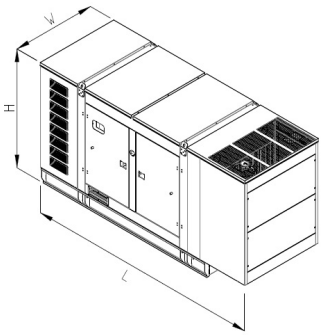

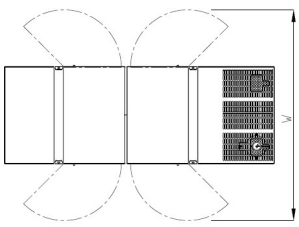

	W [mm] Widht
Door Widths	3760

*9ÈKI·dzăú ăilencer doesn't include to height

This document is for informational purposes only. Arken Jenerator reserves the right to change product specifications.

ENGINE

Arken Jenerator provides industrial diesel engines that meet ISO 8528, ISO 3046 specifications; **heavy duty type**; oil, air or water-cooled depending on the requirements; low fuel consumption; with mechanical and/or electronical type of governor mounted on fuel pump to ensure precise speed adjustment and regulation; with oil, fuel and air filter system based on diesel type; oil and fuel designed for heavy operational conditions in order to make sure the unit lasts a long time with high performance; 4-stroke; direct injection with all the limit and level sensors required for diesel protection. The diesel engine is supplied with all the necessary equipment for safe operation. Only engines designed for standby are not included in the production portfolio.

ALTERNATOR

Arken Jenerator uses original European brand alternators for its gensets, that complies with all international certificates, IEC 60034-1, ISO8528-3, EN55011, BS4999-5000 VDE 0530, depending on their power and requirements. The alternators, that has high efficiency and high performance for all conditions, have all the quality certificates and comply with world standards.

COOLING SYSTEM

Arken Jenerator chooses its radiators from the original selection or from approved vendor list of its engine on boards for the purpose of usability, spare part availability, high performance and maximum efficiency.55C remote type radiators are applible.

FRAME

Arken Jenerator manufactures its own chassis based on international standards for all generator sets. The frames are designed and manufactured to provide high strength from the inside of the plate panel or profile to the vibration and stresses.

FUEL TANK

Arken Jenerator uses an in-chassis daily fuel tank in generator sets up to 800kVA. Larger power sets are supplied with an external stand-type fuel tank. Fuel tanks can be manufactured from plate steel or other suitable materials in accordance with the relevant standards. Arken fuel tanks mainly include:

* Fuel fill point and cap
* Tank vents
* Fuel outlet valve
* Fuel return connection
* Tank drain plug
* Sludge, etc. accumulation section
* Transparent fuel level gauge
* Floating level switch / Automatic Fill (Optional)

CANOPY

To provide sound isolation (ISO8528-10:1998) and to protect the generator from corrosive effects of external weather conditions, cabinets or containers are used depending on the size of the generator or the degree of sound intensity. Even low noise level is targeted principally, the cabins are designed in order to deliver stated power, in addition to the conditions set by ISO3046 and ISO8528, according to the tropical climate at 50C ambient temperatures, relative humidity of 30% at sea level is designed to deliver the declared power. Cabs come with a compact construction, low height, low sound level, easy access to the engine-alternator and control panel, lifting at two point , exhaust silencer stored in the cabin for safety and non-corrosion protection, and with ease of disassembly.

DOCUMENTATION

Maintenance and operation manual, Engine and alternator manuals, Controller booklet, Warranty sheet, Electrical diagram.

WARRANTY

The warranty period begins from the date of the invoice of the item and runs upto 1 Year or 1000 hours.

This document is for informational purposes only. Arken Jenerator reserves the right to change product specifications.